RADEMACHER

EN

RolloTube C-line Tubular Motors

Translation of the Original Operating and Assembly Manual

Applicable for the following series: RolloTube C-line Small (CLIS) /Medium (CLIM)

Item numbers: 2240 06 56 / 2240 10 56 / 2260 10 56 / 2260 20 56 / 2260 30 56 / 2260 40 56 / 2260 50 56

Please note:

Site of installation:

.....

Serial number:

.....

VBD 671-02 (01.23)

Contents

1. This manual... 3

2. Hazard symbols 3

2.1 Levels of danger and signal words 3

2.2 Symbols and depictions used 3

3. Safety instructions 4

3.1 Intended use / operational conditions 5

3.2 Improper use 5

3.3 Required expert knowledge of the installer 5

3.4 Glossary - Definition 6

4. Scope of delivery for RolloTube C-line Small/Medium 7

5. General view of the RolloTube C-line for Small/Medium 8

6. Functional description 9

6.1 Blockage detection function 9

7. Important assembly instructions 10

7.1 Installation of the tubular motor 10

7.2 Mounting the bearings 11

7.3 Determining the length of the winding shaft (5) 11

7.4 Mounting / dismantling the adapter (10) 12

7.5 Mounting /dismantling the drive adapter (8) 12

7.6 Sliding the tubular motor (9) into the winding shaft 13

7.7 Preparation for use of the precision tubes 13

7.8 Mounting the roller capsule (4) 15

7.9 Mounting the motor into the bearing 15

7.9.1 Mounting into the drive bearing as a click bearing (13) 15

7.9.2 Mounting in other drive bearing versions 15

7.9.3 Mounting into the counter bearing (1) 16

7.10 Mounting the roller shutter (17) 16

7.10.1 Mounting the roller shutter with rigid shaft connectors 16

8. Safety information regarding the electrical connection 18

8.1 Connecting the motor cable (15) 18

8.2 Electrical connection of the tubular motor 19

8.2.1 Control of a drive from a single point with a 1-pole switch / button 19

8.2.2 Parallel connection of several motors 19

8.3 Connection of the universal setting cable for manual end point setting 20

8.4 Connecting a cord-switch setting unit for manual end point setting 20

9. Self-learning mode with soft stop 21

10. Manual adjustment of end points 21

10.1 Test run / modifying the end points 23

11. Loading factory settings during the commissioning process 23

12. What to do if... ? 24

13. Technical specifications 25

14. Configuration of KNX/EIB Venetian blind actuators for RADEMACHER tubular motors 25

15. Simplified EU declaration of conformity 26

1. This manual...

- ...serves to describe the installation, electrical connection and operation of RADEMACHER tubular motors of the RolloTube C-line Small and Medium series.
- Before you begin, please read this manual through completely and follow all the safety instructions and assembly instructions.
- This manual forms a component of the product. Please store the manual in an easily accessible place.
- When passing the tubular motor on to any future owners, this manual must be passed on as well.
- Damage resulting from non-compliance with these instructions and safety instructions will void the warranty. We assume no liability for any consequential damage.

2. Hazard symbols

The following hazard symbols are used in this instruction manual:

Danger of fatal electric shock

Danger area / dangerous situation

2.1 Levels of danger and signal words

DANGER!

This hazard will lead to serious injury or death if not avoided.

WARNING!

This hazard may result in serious injury or death if not avoided.

CAUTION!

This hazard may result in minor or moderate injury if not avoided.

ATTENTION!

This hazard may lead to property damage.

2.2 Symbols and depictions used

Depiction / Description	
1. **2.**	Steps to be taken
◆	Itemisation
(1)	List

Further useful information

Please read the respective manual

Unauthorised handling or configuration

3. Safety instructions

Risk of fatal electric shock when touching electrical components.

- The electrical connection for the tubular motor and all work on the electrical systems may only be undertaken by an authorised qualified electrician and in accordance with the connection diagrams in these instructions, see page 18 / 19 et seq.
- Carry out all installation and connection work only in an isolated, de-energised state.

Risk of fatal electric shock when installed incorrectly in damp rooms.

- Especially observe DIN VDE 0100, parts 701 and 702 when installing in damp rooms. These regulations contain mandatory protective measures.

The use of defective equipment can lead to personal injury and damage to property (electric shocks, short circuiting).

- Never use defective or damaged equipment.
- Check the drive and mains cable beforehand for damage.
- Should you discover damage to the equipment, please consult our customer service department.

According to DIN EN 13659, it is necessary to determine that the movement conditions for the shutters are maintained in accordance with EN 12045.

- The displacement must be of at least 40 mm on the lower edge in the rolled-out position with a force of 150 N in the upwards direction.
- In doing so, it must be ensured that the extending speed of the shutters for the final 0.4 m is less than 0.15 m/s.

There is also a risk of fatal injury from crushing resulting from uncontrolled starting of the drive.

- Never attempt to manually stop the motor/shutters in the event of uncontrolled movement.
- In such cases, switch off all power to the drive and take appropriate safety precautions to prevent unintentional switching on.
- Arrange to have the system checked by a skilled electrician.

Exceeding the maximum permissible running time (KB = transient operation) may overload the tubular motor.

- The maximum permissible running time for a cycle may not be exceeded when the equipment is in operation. For this reason, the tubular motor has a running time limit (KB = transient operation) of four minutes.
- If the running time limit is triggered, then the tubular motor must be left for at least 20 minutes to cool down.

Incorrect use leads to an increased risk of injury.

- Train all personnel to safely use the tubular motor.
- Do not allow children to play with the fixed controllers and keep remote controls away from children.
- Cleaning and user maintenance may not be carried out by children without supervision.

For roller shutters:

- Watch the roller shutter whilst carrying out the settings and keep other people away from the area to avoid injury in the event of sudden slippage of the shutter.
- Watch the moving roller shutter during operation and keep other people away from the area until the movement has been completed.
- Carry out all cleaning work on the roller shutter whilst the device is disconnected from the mains power.

For awning systems which can be operated out of sight of the operator:

- The awning may not be operated if work is being carried out nearby (e.g. windows being cleaned).

For automatically actuated awnings:

- Disconnect the awning from the power supply if work is being carried out nearby.

A lack of maintenance can lead to personal injury through damage to your tubular motor and roller shutter or awning system:

- Please check all of your roller shutter system components regularly for damage.
- Check regularly that the roller shutter system is functioning correctly.
- The shutters must not be damaged.
- Damaged components should be exchanged by a specialist roller shutter firm.

With awning systems:

- Check the awning regularly for poor balance or damaged lines and springs.
- Have damaged awnings repaired by a specialist awning firm.

Contact with the drive housing can cause burns.

- The tubular motor gets hot during operation. Allow the motor to cool down prior to undertaking any further work on the motor.
- Never touch the hot drive housing.

3.1 Intended use / operational conditions

Only use the tubular motors for opening and closing standard flat roller shutters and awnings.

The use of the wrong tubular motors or components can lead to property damage.

- The motor cable must therefore be fitted with a suitable empty tube up to the respective junction box under observation of local electrical regulations, if installed outside.
- Only use the manufacturer's original parts and accessories.
- Only use tubular motors which correspond to the local conditions in terms of their power. Incorrectly dimensioned tubular motors can lead to damage:
  - > An insufficiently dimensioned tubular motor can be damaged due to overloading.
  - > An excessively dimensioned tubular motor can,
    for example, cause damage to the roller shutter or roller shutter box in self-learning mode.
- Consult a specialist dealer when selecting a tubular motor and observe the corresponding tractive force specifications on our website: **www.rademacher.de**

Operating conditions

- A 230 V / 50 Hz power supply, together with a site-provided isolating device (fuse) must be permanently available for the electrical connection at the installation location.
- The roller shutter must run up and down smoothly. It should not jam.

Operational conditions for the self-learning mode and for the correct functioning of the blockage detection.

- The roller shutter must be mounted to the winding shaft with rigid shaft connectors **(6)**, see page 16.
- The roller shutter must be fitted with stoppers or an end-rail, see page 16.

3.2 Improper use

Using the RolloTube C-line for purposes other than previously mentioned is impermissible.

Never use the tubular motor in systems with increased safety-relevant requirements or where there is an increased risk of accidents.

- Such applications require additional safety equipment. Observe the respective statutory regulations for the installation of such systems.

Never use the tubular motor in continuous operation. Doing so will cause serious damage.

Never use the tubular motor for shutters with openings of ≥ 50 mm in diameter.

3.3 Required expert knowledge of the installer

The installation, electrical connection and maintenance must be carried out by a qualified person with appropriate training or by a specialist roller shutter firm in accordance with the instructions in this manual.

3.4 Glossary - Definition

Blind

Roller shutter / Venetian blind or similar.

Blockage detection

The blockage detection is a safety function. The tubular motor stops if the roller shutter is blocked.

DIN EN 13659

"Shutters and external Venetian blinds - Performance requirements including safety."

This standard determines the performance requirements that externally attached shutters and blinds must fulfil. It also contains significant hazards with regard to the design, transportation, installation, operation and maintenance of these shutters and blinds.

DIN VDE 0100, Part 701 and 702

"Erection of low voltage installations - Part 7-701 and 7-702"

This standard defines the requirements for special installations or locations, rooms with a bath or shower / basin etc.

Torque monitoring

The torque monitoring protects the roller shutter and the complete system from being destroyed and people from being injured. It is also used to find the end points, amongst other things.

End points

An end point is defined and set for each direction of travel of the roller shutter. Once this point has been reached, the tubular motor switches off and the roller shutter stops.

Transient operation (KB)

Tubular motors are not designed for continuous operation. Transient operation defines the maximum permissible running time.

Magnetic ring

The magnetic ring **(18)** is located in the drive head area **(12)**. It is driven by the winding shaft **(5)** and the adapter **(10)** and is used to find the end points, and monitor/control the shaft rotations in normal mode.

Configuration of KNX/EIB Venetian blind actuators

- KNX/EIB Venetian blind actuators are used to control electrically operated Venetian blinds, roller shutters etc.
- Some parameters must be configured prior to commissioning in order to ensure trouble-free operation.

Roller shutter box

The tubular motor is installed in an existing or retrofitted roller shutter box above the window.

Cord-switch setting unit

RADEMACHER accessory for the specialist roller shutter firm to set the end points.

Rigid shaft connector

Assembly aid to fasten the roller shutter to the winding shaft. A distinction is made between rigid shaft connectors or anti-raise mechanisms and flexible ties (made from metal).

4. Scope of delivery for RolloTube C-line Small/Medium

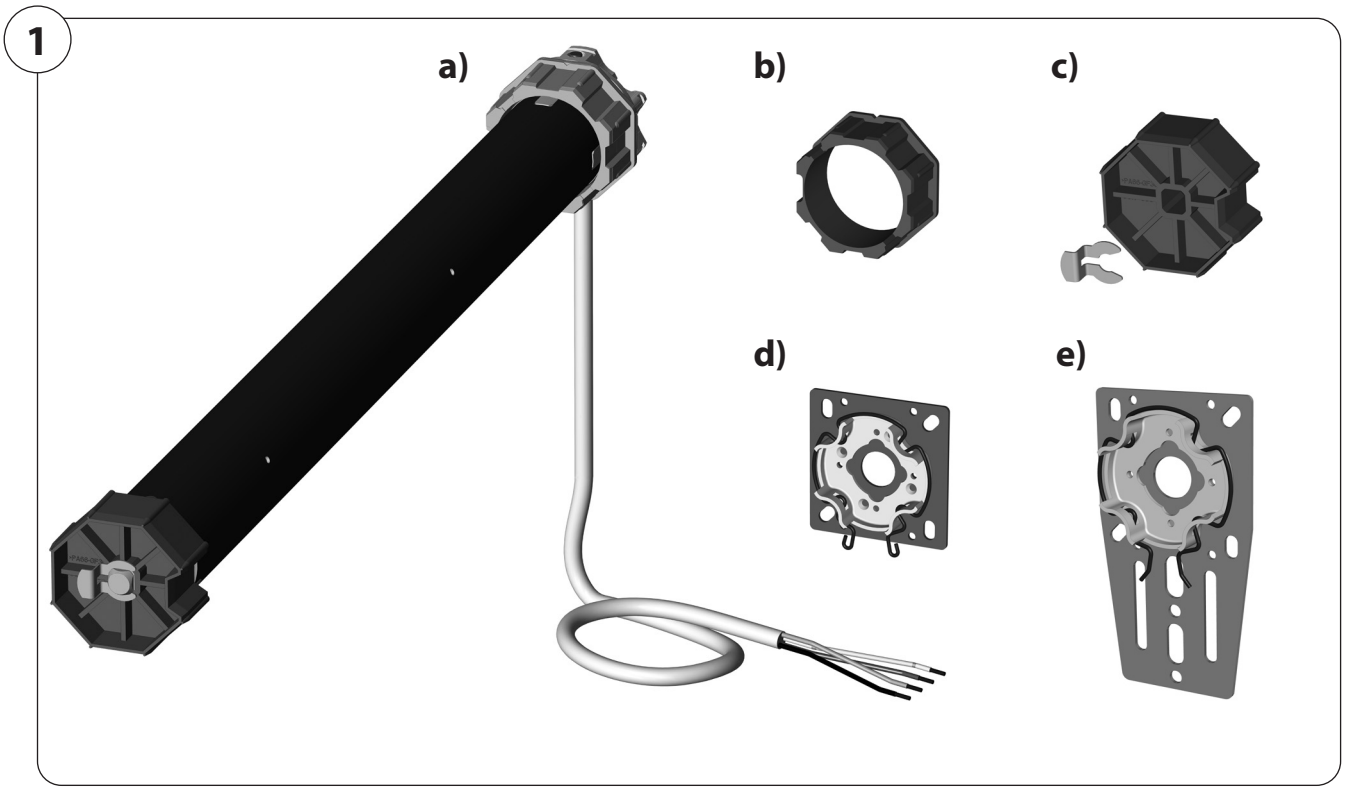

Included in delivery

RolloTube C-line	Small	Medium
(a) Tubular motor, including connecting cable (2,5 m)	1 x	1 x
(b) Adapter		
(c) Drive adapter, incl. retaining clip	1 x	1 x
(d) Click universal drive bearing	1 x	-
(e) Click ready box support	-	1 x

Please note:

Customer-specific scope of delivery

After unpacking please check the following:

Check that the package contents matches the scope of delivery listed on the package.

Check the details on the type plate

- ◆ Check the details for the motor type.
- ◆ Check that the voltage / frequency corresponds to the local mains conditions.

5. General view of the RolloTube C-line for Small/Medium

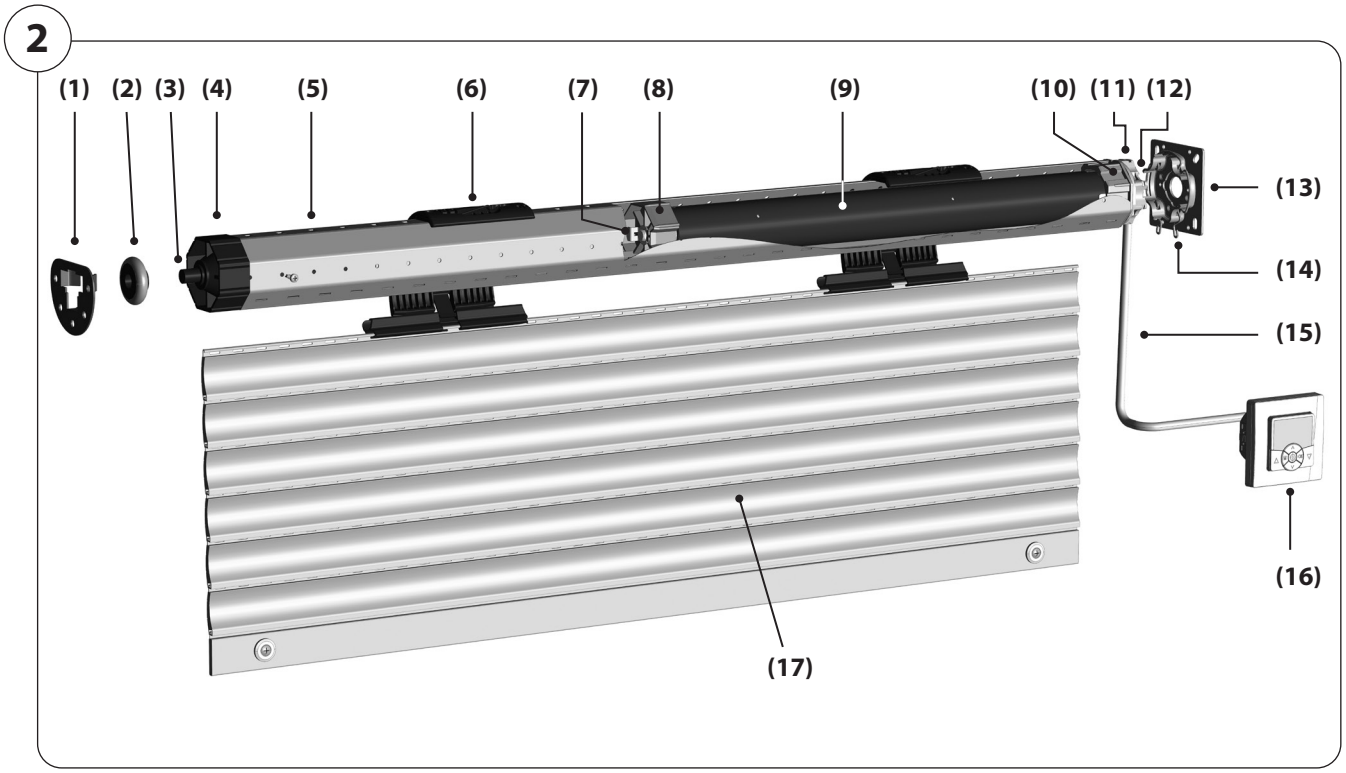

Key to the overall view

(1) Counter bearing *
(2) Ball bearing *
(3) Axle pin on roller capsule *
(4) Roller capsule *
(5) Winding shaft *
(6) Rigid shaft connector *
(7) Retaining clip *
(8) Drive adapter *
(9) Tubular motor
(10) Adapter *
(11) Set button
(12) Drive head
(13) Click drive bearing *
(14) Retaining spring *
(15) Motor cable
(16) Controller (z.B. Troll Comfort) *
(17) Roller shutter

* The necessary accessories and all tubular motor controllers for this type of tubular motor incl. the technical information and manuals can be found on our website.
www.rademacher.de

6. Functional description

The RADEMACHER RolloTube C-line series of tubular motors are designed for opening and closing roller shutters and awnings.

The RolloTube C-line tubular motors are self-learning motors with a soft stop at both end positions. The end positions for the soft stop are automatically learned during the first drive cycles. This eliminates the need to set the end points or a learning cycle.

However of course, the end points can also be set manually, see page 21.

The lower end point must be set manually when using it as an awning drive, see page 21.

The compact design and self-learning soft stop ensure a quick and easy installation.

The RolloTube C-line impresses in daily operation with blockage detection in both directions of travel, ensuring maximum safety and gentle operation.

The roller shutter must be equipped with rigid shaft connectors and stoppers in order to use the RolloTube C-line in self-learning mode, see page 16.

Overview of functions:

- Self-learning mode with a soft stop at both end positions, see page 21.
- Torque monitoring
- Blockage detection in both directions of travel
- Quick and easy installation thanks to the short design
- Either one or both end points can be set manually as required. Also in combination with the self-learning mode.

6.1 Blockage detection function

The tubular motor stops in the event that the roller shutter is blocked by an obstacle in one of the two directions of travel (e.g. if a roller shutter is iced-up/jammed).

Moving a blocked (e.g. iced-up/jammed) roller shutter may overload and damage the tubular motor and roller shutter system.

- Do not move the iced-up/jammed roller shutter and rectify the fault or remove the obstacle.

Requirements for correct blockage detection:

- The roller shutter must be mounted to the winding shaft with rigid shaft connectors.
- The roller shutter must always run vertically, easily and freely in the guide rails of the window.

7. Important assembly instructions

Preparation for installation

- Check that the voltage / frequency on the type plate corresponds to local mains conditions prior to installation.
- You must remove or deactivate all cables and equipment not required for operation of the equipment prior to installation of the tubular motor.
- Moving drive parts to be operated at a height under 2.5 m from the floor must be protected.
- If the tubular motor is to be controlled with a switch with a default OFF setting, then the switch is to be positioned in the line of sight of the tubular motor and at a height of at least 1.5 m.
- The cover of the roller shutter box must be freely accessible and removable without damaging it.
- Never dismantle the stoppers from the final roller shutter slat.
  Otherwise the roller shutter may slip through into the roller shutter box and be damaged.

Risk of fatal injury from crushing in the event of operation without configured end points.

- The end points must be configured in order to ensure safe operation. In order to do so, please refer to the corresponding chapter in this manual on page 21.

Incorrect installation can lead to injuries (impact injuries and contusions).

- The motor can eject from the drive bearing in the event of incorrect installation/fastening. Fasten the tubular motor with the securing devices provided.

Installing the tubular motor at an angle can cause the tubular motor or roller shutter to be damaged. For example, a roller shutter wound at an angle can block the drive and cause damage.

- Always ensure that the tubular motors and bearings are mounted horizontally.
- Please ensure that the winding shaft **(5)** and the roller shutter **(17)** can move down easily and freely after installation is complete.
- The roller shutter **(17)** may not run over the bearing, the roller capsule **(4)** or the drive head **(12)** during operation.
- Ensure that the winding shaft **(5)** and the rigid shaft connectors **(6)** do not touch the drive (9). They may not rub against the tubular motor **(9)** during operation.

For automatically actuated awnings:

- A minimum gap of 0.4 m to other parts in the area must be maintained when the awning is fully extended.
- Awnings used in an awning system must maintain a minimum height of 1.8 m.

Incorrectly dimensioned drives and counter bearings can cause the roller shutter system to be damaged.

- Only use original bearings supplied by the manufacturer. Third-party drives and counter bearings must be selected in accordance with the torque specifications of the respective tubular motors.

7.1 Installation of the tubular motor

The following installation instructions apply to standard installation situations in combination with RADEMACHER tubular motors and accessories.

The drive head **(12)** of the motor can be installed on either the right or left side of the roller shutter box. These instructions depict the installation on the right-hand side.

Required minimum width for the roller shutter box:

Tubular motor type:	Small	Medium
Minimum width approx.:	56 cm	67 cm

7.2 Mounting the bearings

⚠ ATTENTION!

A roller shutter wound at an angle can block the drive and cause damage.

◆ Always ensure that the bearings are mounted as horizontal as possible.

3

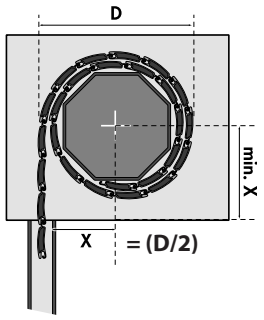

1. First determine the position of the drive **(13)** and counter bearing **(1)** in the roller shutter box.
2. Wind the roller shutter casing fully onto the winding shaft and measure the diameter **[D]**. See figure **[3]** for determining the position of the centre of the bearing to the guide rail.

   i When installed, the wound roller shutter must run vertically in the guide rail on the window.

3. Fasten the bearing in accordance with the bearing type and on-site conditions.
4. Mount the drive bearing **(13)** so that the set button **(11)** on the drive head will be easily accessible at a later stage and the motor cable **(15)** can be laid without kinking.

7.3 Determining the length of the winding shaft (5)

1. Measure the wall gap of the drive **(13)** and counter bearing **(1)** as shown.
2. Measure the roller shutter box and calculate the required shaft length **[L]**.
3. Length of the winding shaft: **L = A - (B + C).**

   Recommendation

   Shorten **L** by approx. **5 mm** more than calculated by the equation to ensure a sufficiently large space of 2 to 3 mm in the overall length when the roller capsule **(4)** is inserted.
4. Shorten the winding shaft **(5)** to the required size.

   Cut the shaft to size with a hacksaw at a right-angle. Remove the burrs from the shaft internally and externally with a file.

4

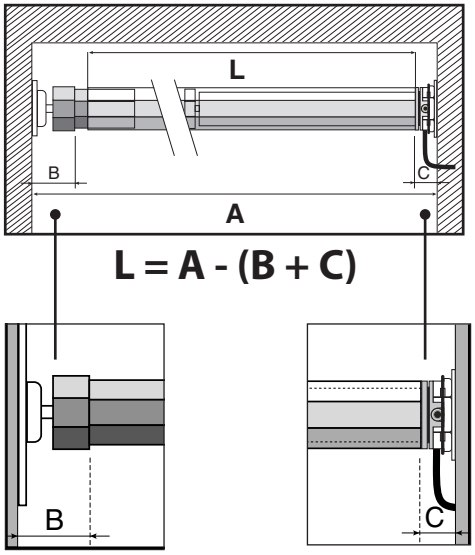

B = Counter bearing / roller capsule
C = Drive bearing / motor

7.4 Mounting / dismantling the adapter (10)

Mounting the adapter (10)

1. Slide the adapter **(10)** over the magnetic ring **(18)** on the drive head until it engages. In doing so, check the correct positioning of the groove in the adapter **(10)** (original factory settings).

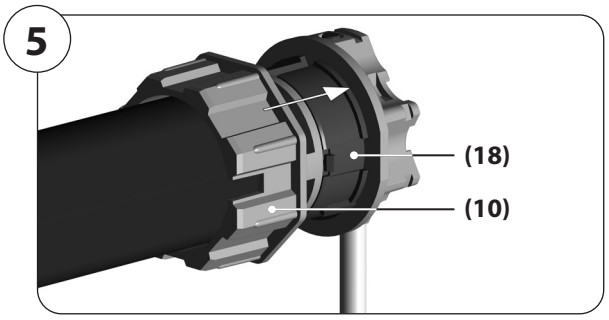

Dismantling the adapter (10)

1. Press the two retaining springs on the magnetic ring **(18)** downwards and pull the adapter **(10)** off the magnetic ring **(18)**.

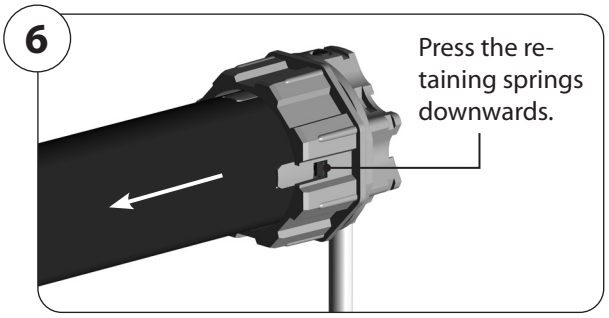

7.5 Mounting /dismantling the drive adapter (8)

Mounting / dismantling the drive adapter (8)

1. Slide the drive adapter **(8)** onto the gear drive shaft **(19)** until it can go no further and secure it with the retaining clip provided **(7)** (original factory settings).

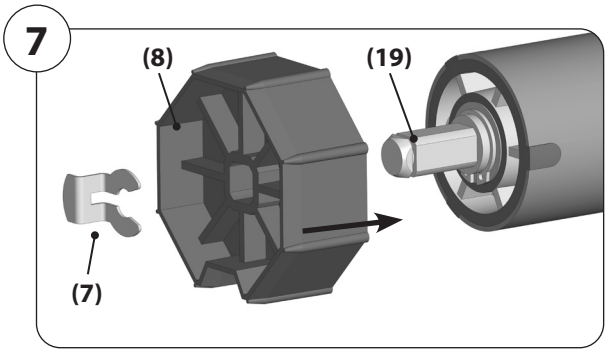

Dismantling the drive adapter (8)

1. Release the retaining clip **(7)** from the gear drive shaft **(19)** and pull the drive adapter **(8)** off again.

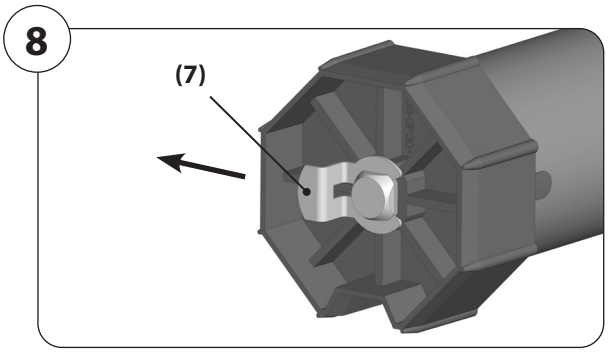

7.6 Sliding the tubular motor (9) into the winding shaft

⚠ ATTENTION!

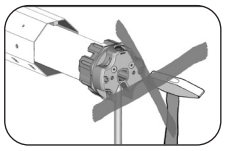

Inserting the tubular motor (9) forcibly into the winding shaft (5) will cause serious damage.

◆ Never knock the tubular motor **(9)** with force into the winding shaft **(5)**.

1. First slide the drive adapter **(8)** into the winding shaft **(5)**.

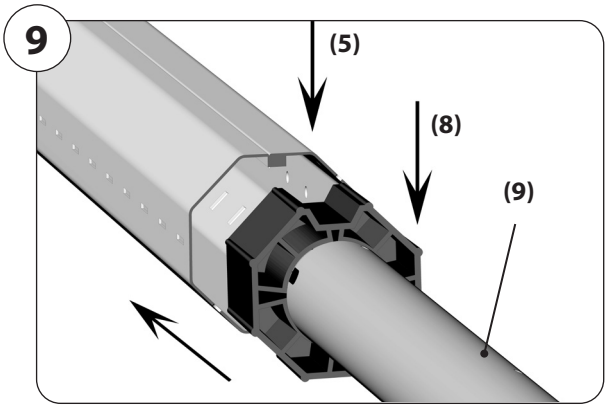

i The motor **(9)** must have sufficient free space for winding shafts with internal felt.

2. Subsequently, press the winding shaft **(5)** fully onto the adapter **(10)**.

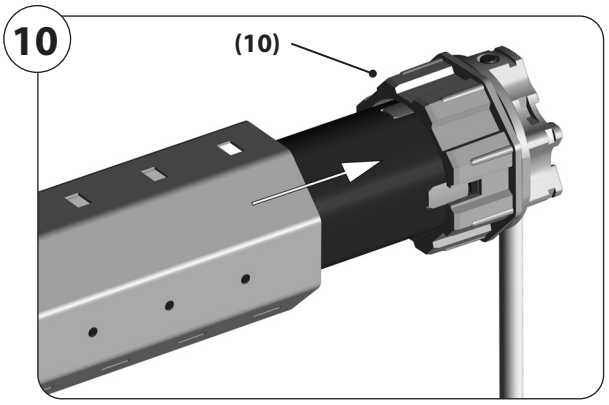

⚠ ATTENTION!

◆ In doing so, ensure that the adapter **(10)** does not slip off the magnetic ring **(18)** on the drive head **(12)** during the assembly process. Otherwise malfunctions may occur, see page 24.

◆ The motor must always be pushed fully into the winding shaft. The length compensation or correction is configured with the position of the roller capsule, see page 16.

7.7 Preparation for use of the precision tubes

i Please only use precision tubes made from aluminium.

◆ The following steps can be left out when using octagonal steel shafts.

1. Measure the distance between the adapter **(10)** and the rear third of the drive adapter **(8)** and mark this distance on the precision tube.

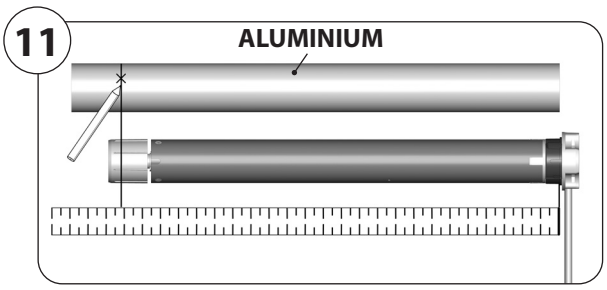

7.7 Preparation for use of the precision tubes

2. Saw a groove in the end of the precision tube ❶ in order that the cam ❷ of the adapter (10) can be completely pressed into the tube.

- ◆ There may not be any play between the groove ❶ and the cam ❷.
- ◆ The dimensions for the groove ❶ are dependent on the tubular motor type used, see figures.

12

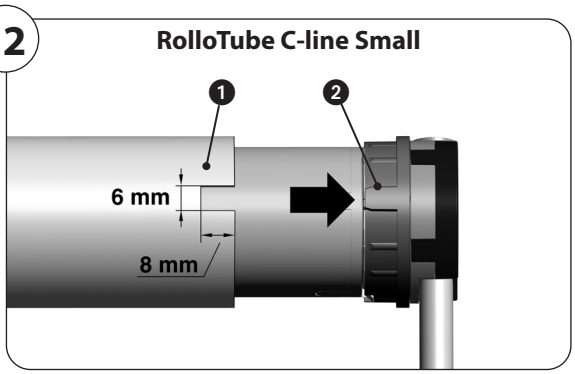

13

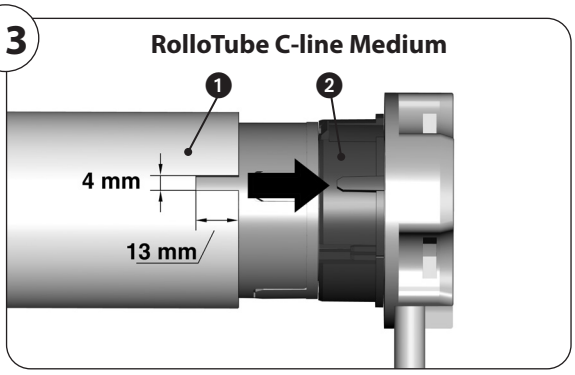

3. Slide the tubular motor into the precision tube.

14

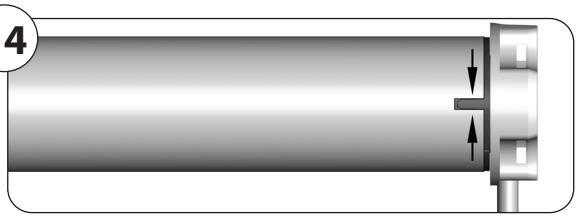

4. Mark the four fastening holes and subsequently drill them through the precision tube into the drive adapter **(8)**.

- ◆ Never drill deeper than 10 mm into drive adapter **(8)**.

⚠ ATTENTION!

Drilling in the area of the drive causes serious damage.

- ◆ Never drill in the area of the drive **(9)**.

15

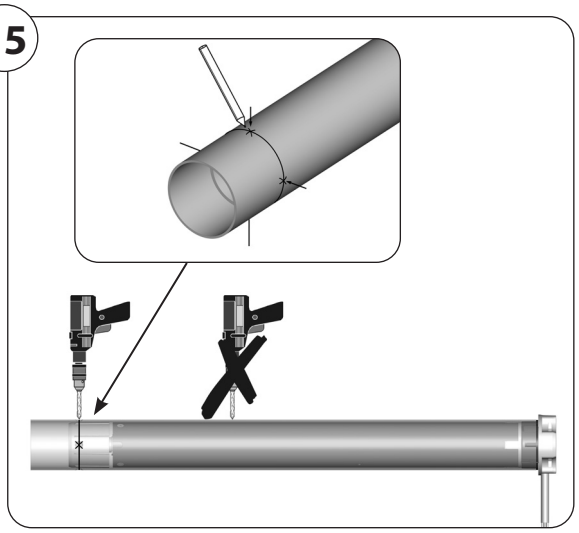

5. Screw or rivet the precision tube to the drive adapter **(8)**.

Use four self-tapping sheet metal screws or four pop rivets for this.

16

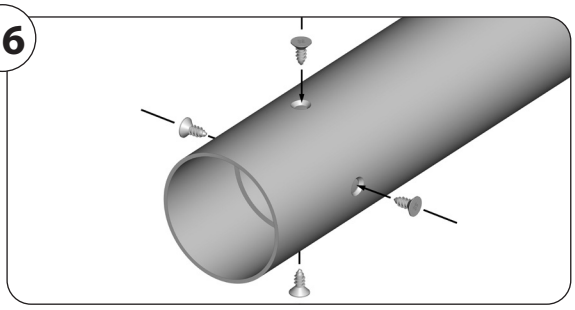

7.8 Mounting the roller capsule (4)

1. Slide the roller capsule **(4)** into the winding shaft **(5)** and subsequently place the ball bearing **(2)** onto the axle pin **(3)** of the roller capsule.

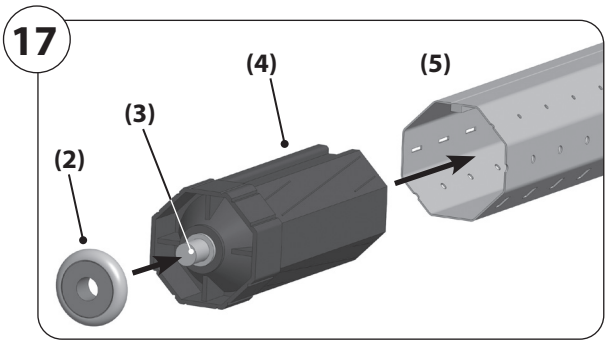

7.9 Mounting the motor into the bearing

7.9.1 Mounting into the drive bearing as a click bearing (13)

1. Press the drive head **(12)** lightly into the click bearing **(13)** until it engages. The set button **(11)** must be easily accessible.

The tubular motors can be fitted into the click bearing **(13)** in 4 positions.

- The motors can be released from the click bearing **(13)** at any time by means of expanding the retaining spring **(14)**.

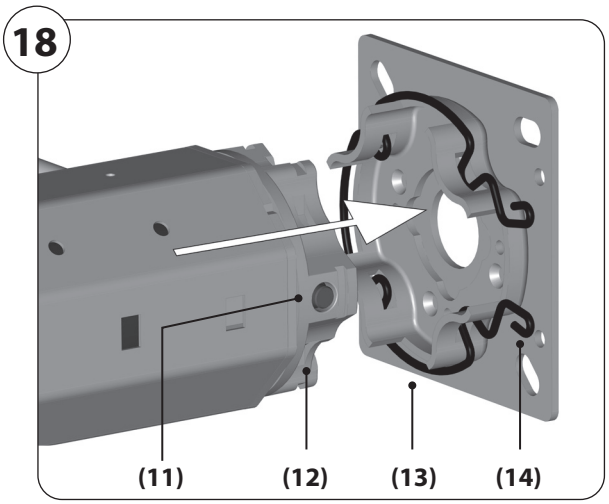

WARNING!

Risk of short-circuit resulting from water in the event of improper cabling.

- Never lay the motor cable **(15)** vertically upwards otherwise water may collect on the cable and run into the motor, leading to damage.
- Lay the cable in a loop. The loop will cause any water on the cable to collect at the lowest point, from where it can drain off.

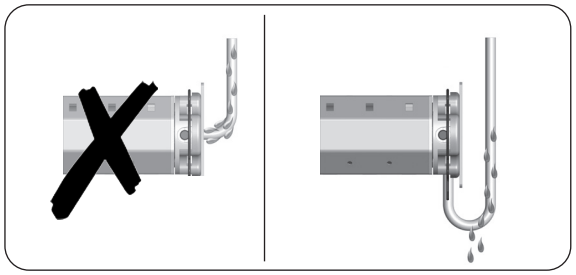

7.9.2 Mounting in other drive bearing versions

Hook the drive head **(12)** into the corresponding drive bearing and secure, for example, with a cotter pin.

7.9 Mounting the motor into the bearing

7.9.3 Mounting into the counter bearing (1)

1. Insert the other end of the winding shaft **(5)** with the ball bearing **(2)** into the counter bearing **(1)**.
2. In the event that you are using a different bearing than the RADEMACHER click bearing **(13)**, you may need to secure the drive with a secondary cotter pin.
3. Correct any slight inaccuracies in size by means of sliding the roller capsule **(4)** in or out.

The roller capsule **(4)** must be inserted at least **2/3** of its length into the winding shaft **(5)**.

Make sure that there is sufficient space in the axle length to ensure ease of movement.

4. Finally, secure the roller capsule **(4)** with a screw.

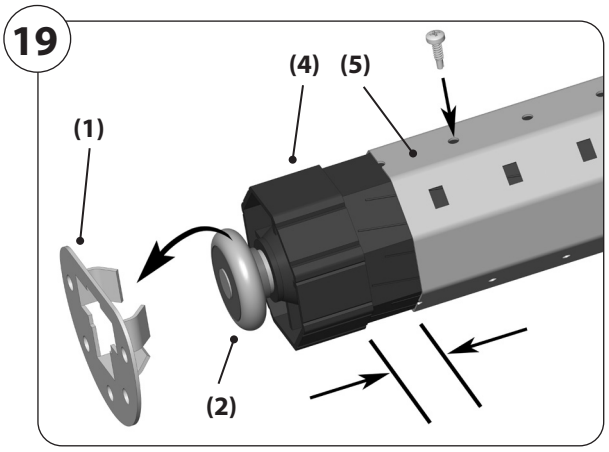

7.10 Mounting the roller shutter (17)

⚠ ATTENTION!

The roller shutter may run into the roller shutter box in self-learning mode and be damaged without rigid shaft connectors and stoppers.

- Connect the roller shutter **(17)** to the winding shaft **(5)** with rigid shaft connectors **(6)**.
- Always fit two stoppers or an end-rail to the roller shutter **(17)**.

⚠ ATTENTION!

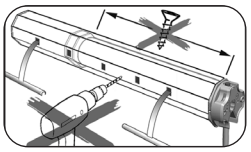

Drilling and inserting screws in the area of the drive will cause the drive to be damaged.

- Never drill or insert screws in the area of the drive **(9)** in order to secure the roller shutter **(17)**.

7.10.1 Mounting the roller shutter with rigid shaft connectors

Determine the number of rigid shaft connectors required

Mount at least two rigid shaft connectors per roller shutter on both ends of the corresponding octagonal shaft. The number of rigid shaft connectors may vary from the following recommendation, depending on the operating conditions.

Roller shutters width / minimum number:

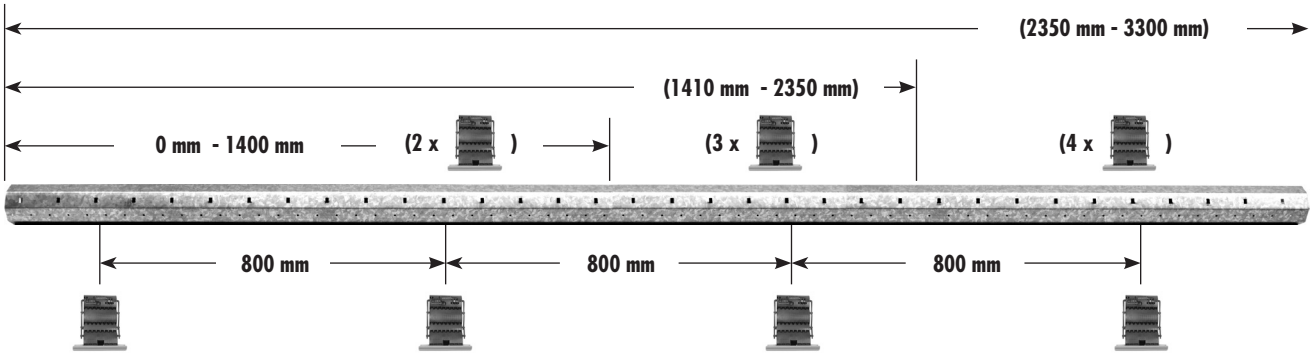

Recommendation: Mount an additional rigid shaft connector every 800 mm.

7.10 Mounting the roller shutter (17)

1. Mount the shaft connectors **(6)** at the winding shaft **(5)**.

In order to do so, follow the information provided in the operating manual for shaft connectors.

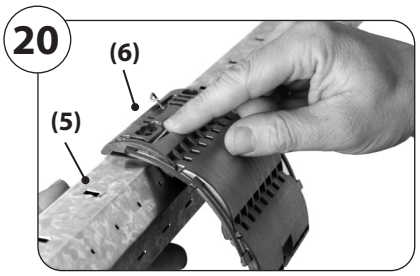

2. Slide the retainer profile for each shaft connector **(6)** onto the uppermost slat of the roller shutter **(17)**.
3. Subsequently slide each retainer profile over a shaft connector **(6)**.

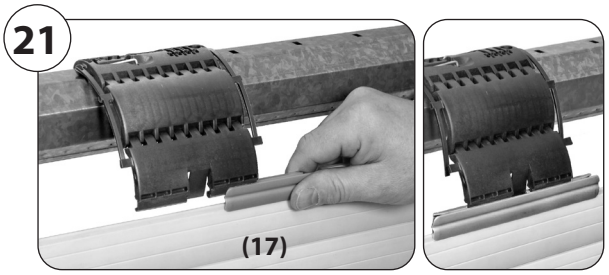

4. Finally, mount two roller shutter stoppers **(20)** or an end-rail onto the lowermost slat or rail of the roller shutter **(17)**.

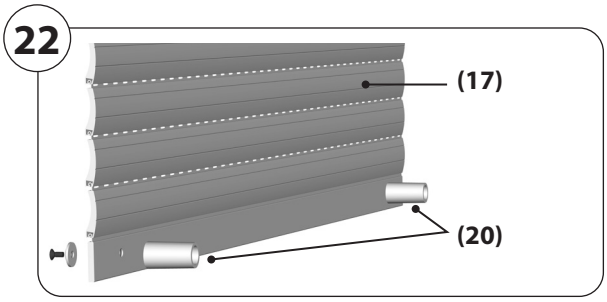

8. Safety information regarding the electrical connection

DANGER!

Risk of fatal electric shock when touching electrical components.

- Carry out all installation and connection work only in an isolated, de-energised state.
- Disconnect all phases of the mains power cable and secure it to prevent any reconnection.
- Check that the system is de-energised.

Fixed-installation devices...

...must be equipped on the installation side with a circuit-breaker for each phase in accordance with DIN VDE 0700. Switches with a contact opening width of min. 3 mm can be used as circuit-breakers (e.g. power switch, power circuit breaker or residual-current-operated circuit-breaker).

WARNING!

Risk of short-circuit resulting from damaged cable.

- Lay all cables in the roller shutter box so that they cannot be damaged by moving machinery.
- The mains connection for the drive may only be connected with the same conduction type. Consult customer services if necessary.

WARNING!

Risk of short-circuit resulting from water in the event of improper cabling.

- Never lay the motor cable **(15)** vertically upwards otherwise water may collect on the cable and run into the motor, leading to damage.
- Lay the cable in a loop. The loop will cause any water on the cable to collect at the lowest point, from where it can drain off.

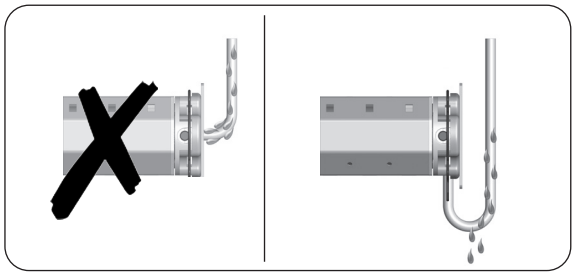

8.1 Connecting the motor cable (15)

1. Connect the motor cable **(15)** according to the following wiring configuration.

Colour scale for the motor leads (15)

L1	=		(black) *
L1	=		(brown) *
N	=	neutral terminal	(blue)
PE	=	earth	(green / yellow)
(11)	=	Set button on tubular motor	

* The actual direction of travel of the tubular motor and the roller shutter depends on the direction of installation and the wiring of the tubular motor.

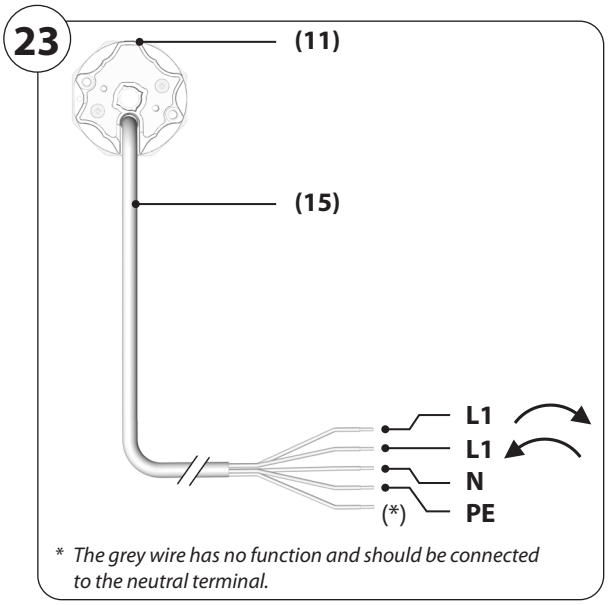

* *The grey wire has no function and should be connected to the neutral terminal.*

8.2 Electrical connection of the tubular motor

8.2.1 Control of a drive from a single point with a 1-pole switch / button

Legend

(a) = Set button **(11)**
(b) = Controller (e.g. 1-pole switch / button)
(c) = Mains 230 V/50 Hz
(d) = Socket box

Pin assignment

(e) = **PE** green / yellow
(f) = **N** blue
(g) = **L1** black
(h) = black (direction of travel 1)
(i) = brown (direction of travel 2)

* *The grey wire has no function and should be connected to the neutral terminal.*

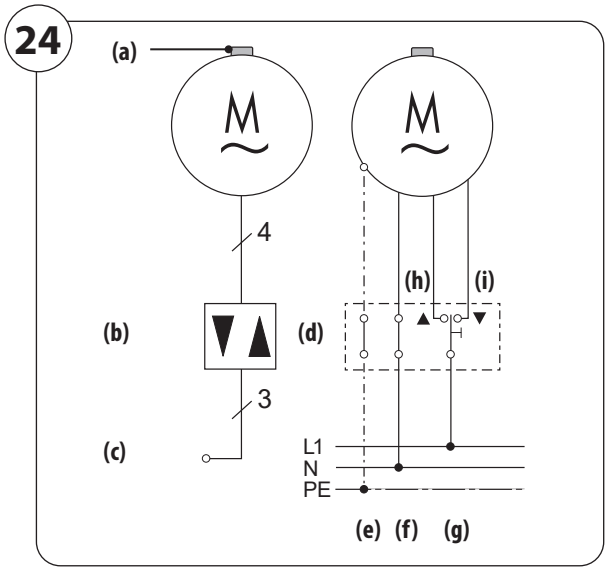

When using a switch, we recommend that the mains power to the motor is switched off (switch in zero position) after reaching the end points. This avoids the motor experiencing sources of interference or excess voltages.

8.2.2 Parallel connection of several motors

It is possible to connect numerous RADEMACHER tubular motors in parallel. The number of motors to be connected in parallel is dependent on the capacity of the switchgear and circuit-breakers.

It is not possible to control individual motors if the equipment is connected in parallel.

End point setting of tubular motors connected in parallel:

◆ **RolloTube C-line in self-learning mode:**

> No end point setting is required, see page 21.

> Manual adjustment of the lower end point is required when using as an awning drive, see page 21.

◆ **RolloTube C-line in parallel connection with other tubular motors:**

> The end points must be set for each other tubular motor in accordance with the respective operating manual.

Using rigid shaft connectors and stoppers

RolloTube C-line in self-learning mode and tubular motors with automatic end point setting must be fitted with rigid shaft connectors and stoppers, see also page 16 and 21.

Installation example

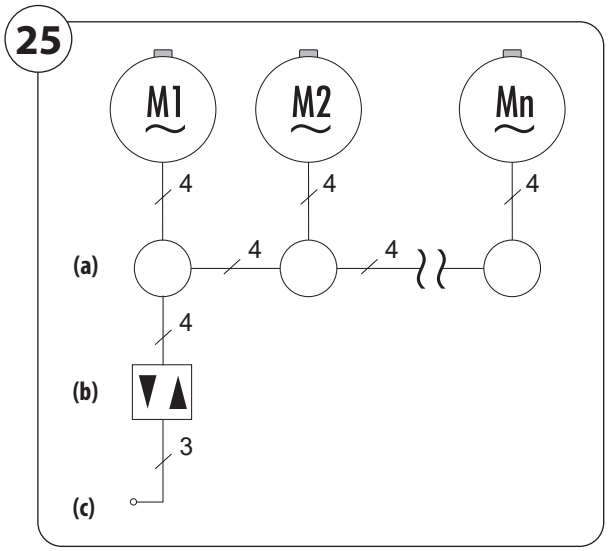

Legend

(a) = Junction box
(b) = Controller, e.g. 1-pole switch / button
(c) = Mains 230 V / 50 Hz

Parallel connection with Venetian blind switches or Venetian blind buttons

UP to five motors can be switched in parallel with RADEMACHER Venetian blind switches or Venetian blind buttons.

Parallel connection with RADEMACHER controllers (e.g. Troll Comfort)

Please refer to the technical data for the respective number of tubular motors that can be connected in parallel.

8.3 Connection of the universal setting cable for manual end point setting

26

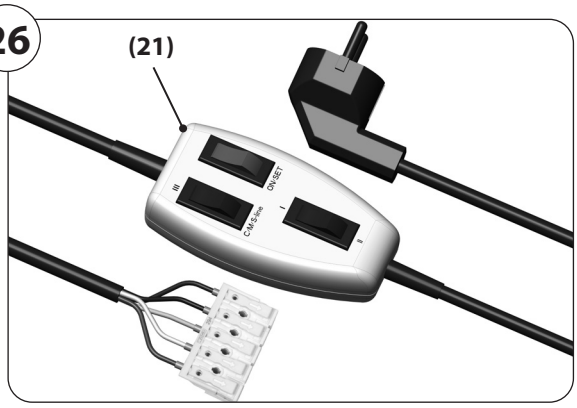

1. Open the terminal contacts by pressing the plungers and connect all of the wires of the motor cable **(15)** with the same colours and corresponding to their functions, see also figure **[23]**.

Pin assignment:

The connection is made with the same colours as the motor connecting cable of the RolloTube C-line, see figure **[23]**.

Button assignment for RolloTube C-line:

Button 2

Button 1

Button 3

Button 1 = direction of travel 1 / 2
Button 2 = set button
Button 3 = no function

8.4 Connecting a cord-switch setting unit for manual end point setting

27

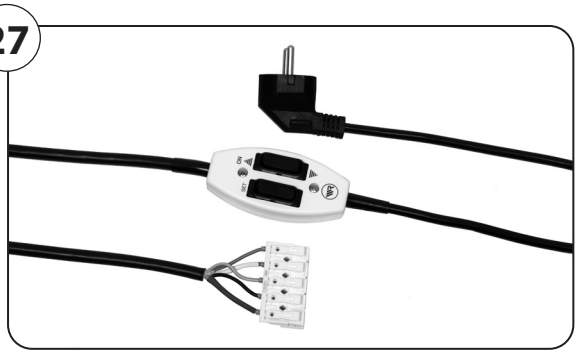

1. Open the terminal contacts by pressing the plungers and connect all of the wires of the motor cable **(15)** corresponding to their functions, see also figure **[23]**.

Pin assignment:

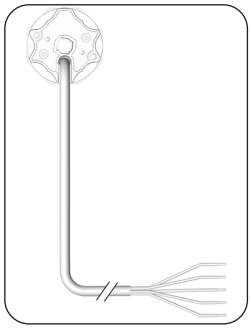

Motor cable (15)	>	**cord-switch setting unit**
L1 (black)	>	**ON** (black)
L1 (brown)	>	**SET** (white)
N Neutral terminal (blue)	>	**N** (blue)
PE Earth (green/yellow)	>	**PE** (green/yellow)

SET = direction of travel 1

ON = direction of travel 2

= no function

9. Self-learning mode with soft stop

The RolloTube C-line is delivered from the factory in self-learning mode with a soft stop and can be put into operation immediately after the electrical connection.

⚠ ATTENTION!

The roller shutter may run into the roller shutter box in self-learning mode and be damaged without rigid shaft connectors and stoppers.

- Connect the roller shutter to the winding shaft **(5)** with rigid shaft connectors **(6)**, see page 16.
- Always fit two stoppers or an end-rail to the roller shutter, see page 16.
- Never dismantle the mechanical stoppers from the final roller shutter slat.

1. Switch on the mains power supply.
   The RolloTube C-line is ready for operation immediately.
2. ▲ | ▼ Move the roller shutter up and down.
   The end positions for the soft stop are automatically learned during the first drive cycles.
3. Subsequently check the direction of travel of the roller shutter.
   Switch the lines for the direction of rotation if the direction of travel is wrong, see connection diagram **[24]** on page 19.

10. Manual adjustment of end points

You can also adjust the end points manually if required:

- Manual adjustment of the upper and lower end point, e.g. during the initial installation.
- Manual adjustment of an end point in combination with the self-learning mode.

When using as an awning drive:

You must adjust the lower end point manually when using the RolloTube C-line as an awning drive.

The upper end position can then be adjusted in self-learning mode.

Initial installation

At the initial installation, the roller shutter engineer can carry out the end point setting with the help of the **set button (11)** on the motor or with a commercially available **universal setting cable (21)** or with a **cord-switch setting unit**.

In order to do so, follow the more detailed information provided in the operating manual of the respective accessories.

Subsequent modification of the end points with external controllers

If you want to subsequently modify the end points of your tubular motor, you can adjust these with your roller shutter controller (e.g. Troll Comfort).

⚠ WARNING!

Risk of fatal injury (electric shock) due to tearing off the motor cable (15).

- Ensure that the motor cable **(15)** is not taken up by the winding shaft **(5)** or torn off during the configuration process.

Important conditions for adjusting the end points and for safe operation

- End points must be set in order to switch off the motor when they are reached for both directions of travel, up (▲) / down (▼).
- The tubular motor must be fully installed.
- There must be a suitably fixed limit (e.g. a window sill) in the area of the lower end point if the end point is to be configured automatically.

⚠ CAUTION!

Risk of crushing injuries to the hand when working with the roller shutter box open.

- Never reach into the area of the winding shaft when the motor is running.

⚠ ATTENTION!

The roller shutter may be damaged in case of incorrect manual adjustment of the end points.

- Never dismantle the mechanical stoppers or the end rail from the final roller shutter slat.
- Do not allow the shutter to knock against the mechanical stoppers and maintain a safety gap of 2 - 3 cm.

10. Manual adjustment of end points

	With the set button on the tubular motor	OR	With the universal setting cable	OR	With the cord-switch setting unit
1. Move the roller shutters in the desired direction. **Recommendation** First in upright position.	▲ ▼		I Direction of travel 1 **or** II Direction of travel 2		SET Direction of travel 1 ON Direction of travel 2 With the SET button or ON switch (direction of travel 1 or 2)
2. In addition ...	press the set button on the tubular motor.		III press/tap twice briefly and press and hold the third time.		press/tap the ON switch or SET button for the opposite direction twice briefly and engage/press and hold the third time.
3. Release the button again as soon as the desired end point is reached.			III		SET **or** ON
4. You can correct the end point in small steps by briefly pressing the button.			III		SET **or** ON
5. Switch off the specified direction of travel after successfully setting the end points. The respective end point is stored.	▲ ▼ Set the Venetian blind switch to the neutral position and release the set button.		I II Set the rocker switch to the centre position.		ON Set the switch to the centre position and .. SET release the SET button.

Switch off the mains power supply after successfully setting the end points and reconfigure the original connection in accordance with the connection diagram [24] on page 19 if you have carried out the setting with the universal setting cable or with a cord-switch setting unit.

In the event that a malfunction occurs during the configuration, e.g. the tubular motor only runs for a single rotation even when you press and hold the set button, the adapter **(10)** may have slipped off the drive head **(12)**.

◆ Check and, if necessary, correct the positioning of the adapter **(10)**, see page 24.

10.1 Test run / modifying the end points

1. Check the direction of travel of the motor. Switch the lines for the direction of rotation if required, see connection diagram **[24]** on page 19.
2. Check the configuration and allow the roller shutter to run in both directions, until the end points switch off the motor.

⚠ ATTENTION!

The tubular motors are designed for transient operation (approx. 4 mins).

If this period is exceeded, or if the equipment is switched over frequently, then the motor may heat up and the thermal protection system will shut it off.

◆ In this case, allow the motor to cool down for 20 minutes.

Modifying the end points

Move the roller shutter back to the centre position and begin the process again.

11. Loading factory settings during the commissioning process

Self-learning mode with a soft stop is active again after loading the factory settings.

Notes for carrying out the configuration

◆ In order to carry out this configuration, it is necessary to connect the two control lines for up (▲) and down (▼) separately to the phase **(L)**.

◆ Verwenden Sie dazu entweder das im Fachhandel erhältliche neue Universal-Einstellkabel **(21)** oder das ältere Schnurschaltersetzgerät oder einen externen Taster mit zwei Schaltkontakten.

◆ The tubular motor may not be in operation.

Factory settings:

End points:	No end points stored
Self-learning mode with soft stop:	activated

Proceed as follows:

1. Connect both directions of travel to the mains supply for approx. 5 seconds until the tubular motor confirms this by briefly running up and down.

5 sec.

◆ Switch **button 1** to any position and press **button 2** (set button) when using the universal setting cable **(21)**.

◆ Please press the ON switch and SET button at the same time when using a cord-switch setting unit.

◆ Please press both buttons at the same time when using an external button.

After that the factory settings are loaded.

2. Switch off the mains power supply and reconfigure the original connection in accordance with connection diagram **[24]** on page 19, if you have carried out the setting with the universal setting cable or with a cord-switch setting unit.

12. What to do if... ?

...the motor fails to start?

Possible cause:

◆ The mains voltage is not available.

Solution:

◆ Check the power with a meter to ensure that the supply voltage (230 V) is available and check the wiring.

◆ Observe especially the information relating to impermissible connection types.

...the wiring is incorrect?

Possible cause:

◆ The control lines are mixed up.

Solution:

◆ Disconnect the lead from the mains and exchange wires for **L1** and **L1** .

...The tubular motor stops after a short period of time during the configuration and test procedures?

Possible cause:

◆ The adapter **(10)** may have slipped off the magnetic ring **(18)** on the drive head **(12)**.

Solution:

◆ Check that the adapter **(10)** sits flush with the drive head **(12)** and is fully inserted into the winding shaft **(5)**.

◆ Slide the adapter **(10)** back so that it is flush with the drive head **(12)** and slide the winding shaft **(5)** fully onto the adapter **(10)**, see figures **[5 / 7]**. Readjust the end points if necessary, see page 21.

...The tubular motor stops between the two end points during normal operation?

Possible cause 1:

◆ The roller capsule **(4)** may not be secured with a screw to the winding shaft **(5)** (see figure **[19]**), causing the winding shaft **(5)** to slip from the motor and the adapter **(10)** to come away from the magnetic ring **(18)**.

Solution 1:

◆ Check for correct fitting of the roller capsule **(4)** and adapter **(10)**. Use a self-locking bolt to secure the roller capsule **(4)** to the winding shaft **(5)** and remount the motor in accordance with the information on pages 10 - 16.

Possible cause 2:

◆ The thermal protection system has triggered.

Solution 2:

◆ Wait approx. 20 minutes until the motor has cooled down.

...The roller shutter stops during upward or downward travel?

Possible cause:

◆ Iced-up/jammed roller shutter or obstacle on the guide rail.

Solution:

◆ Manually move the roller shutter a short distance in the respective opposite direction.

◆ Rectify the iced-up roller shutter or obstacle.

...The roller shutter judders /stops during downward travel although there is no obstacle?

Possible cause 1:

◆ The roller shutter may be too light. It must run easily and have an appropriate drop weight.

Solution 1:

◆ Place weight on the lowest roller shutter slat (e.g. with a flat bar).

Possible cause 2:

◆ The winding shaft may be installed very tightly.

Solution 2:

◆ Loosen the roller capsule and insert it approx. 2-3 mm further into the winding shaft and fix the capsule again with a screw.

13. Technical specifications

Motor series:		CLIS xx/xx PZ		CLIM xx/xx PZ				
Nominal torque:	Nm	6	10	10	20	30	40	50
No-load speed	rpm	28	16	16	16	16	16	12
Nominal voltage	V	230	230	230	230	230	230	230
Frequency	Hz	50	50	50	50	50	50	50
Nominal power	W	121	121	112	145	191	198	205
Current consumption	A	0.53	0.53	0.49	0.64	0.83	0.86	0.89
On-period (KB)	min.	4	4	4	4	4	4	4
Number of wires		5	5	5	5	5	5	5
Core cross section	mm^2	0.75	0.75	0.75	0.75	0.75	0.75	0.75
Connection cable	m	2.5	2.5	2.5	2.5	2.5	2.5	2.5
End switching range: (number of revolutions.)	r	112	64	64	64	64	64	48
Insulation class		H	H	H	H	H	H	H
Protection class		I	I	I	I	I	I	I
Protection type in accordance with VDE 700		IP 44	IP 44	IP 44	IP 44	IP 44	IP 44	IP 44
Motor length without bearing	mm	485	485	487	487	546	546	546
Tube diameter	mm	35	35	45	45	45	45	45
Sound pressure level (LpA)	dB(A)	≤ 70	≤ 70	≤ 70	≤ 70	≤ 70	≤ 70	≤ 70
Number of parallel tubular motors that can be connected in parallel when using RADEMACHER controllers, e.g. Troll Comfort		3	3	2	2	2	2	2

14. Configuration of KNX/EIB Venetian blind actuators for RADEMACHER tubular motors

in order to ensure trouble-free operation of RADEMACHER tubular motors with KNX/EIB Venetian blind actuators, the following parameters must be configured prior to commissioning:

Transient operation

If possible, transient operation (slat adjustment) should be switched off.

e.g. **Mode for transient operation**
Time: = 0 ms

If transient operation cannot be deactivated from within the software application...

...then you must ensure that the time between transient operation and long-term operation on the key sensor is less that the time between transient operation and long-term operation on the actuator.

This will ensure that transient switch-off of the actuator is prevented when holding the sensor key down.

Long-term operation

The motor **must** be switched off at the latest after 180 seconds.

e.g. **Basis for long-term operation**
Basis: = 2.1 s
Factor: = 86
= (2.1 s x 86 = 180.6 s)

15. Simplified EU declaration of conformity

RADEMACHER Geräte-Elektronik GmbH hereby declares that the tubular motors in the RolloTube C-line Small and Medium series comply with the Directives **2006/42/EC (Machinery Directive)** and **2014/30/EU (EMC Directive)**.

The full text of the EU declaration of conformity is included with the product and is kept on file by the manufacturer.

RADEMACHER Geräte-Elektronik GmbH
Buschkamp 7
46414 Rhede (Germany)

Warranty terms and conditions

Information on our warranty conditions is enclosed separately with this product.

RADEMACHER
Geräte-Elektronik GmbH
Buschkamp 7
46414 Rhede (Germany)

Subject to technical modifications, misprints and errors.
Illustrations not binding.